KNUCKLE BOOM

45ft Diesel

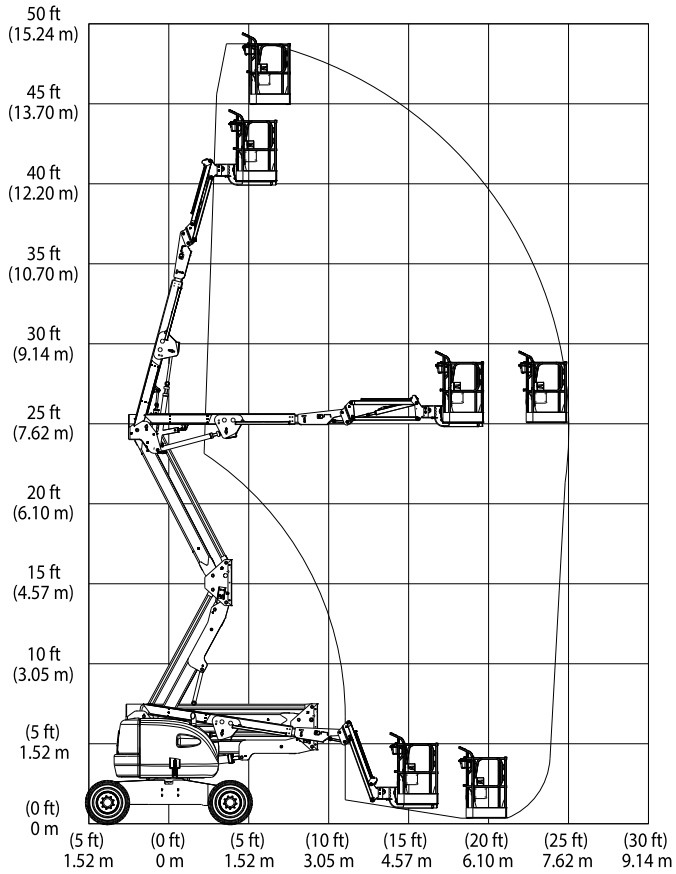

- ✓ Outdoor use
- ✓ Diesel rough terrain

MEASUREMENTS	
Working height max	15.72 m
Platform height max	13.72 m
Horizontal outreach max	7.47 - 7.62 m
A Platform length	0.76 m
B Platform width	1.83 m
C Width	2.08 - 2.35 m
D Length - stowed	6.53 - 6.57 m
E Height - stowed	2.27 - 2.30 m
Wheelbase	1.98 m
Ground clearance - center	0.36 m
PRODUCTIVITY	
Lift capacity	230 kg
Platform rotation angle	170°
Slewing angle	360°
Jib articulation range	145° (75° raise / 70° lower)
Gradeability	45% (24.23°)
Speed	7.2km/h
Power cord to platform	Yes (on some models)
On board generator with power to platform	Yes (on some models)
Tyres	Rough terrain, non marking (on most models)
Charge / Fuel	Diesel (62.5 L)
Drive	4WD
MACHINE WEIGHT	6,450 - 7,430 kg
SAFETY FEATURES	
Fire extinguisher	Yes
Anti-Crush	Yes (depending on model)

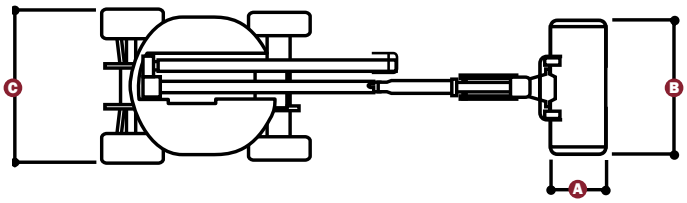

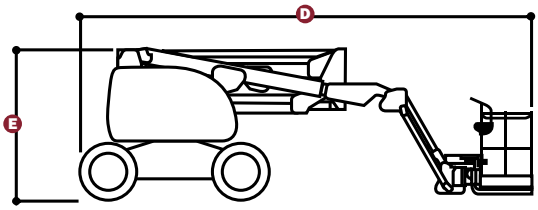

* Specifications are indicative only and may vary depending on model.